# Constructor University Bremen

# Natural Science Laboratory
# Electrical Engineering Module I

# Fall Semester 2024

# Lab Experiment 1 – Usage of Multimeter

Author of the report Mr. Nikoloz Burduli

| | |
|---|---|
| Experiment conducted by | : Mr. Nikoloz Burduli, Mr. Niolozi Sikharulidze |
| Place of execution | : Teaching Lab 53 |
| Date of execution | : Oct. 10, 2024 |

# 1 Introduction

Accurate measurement of electrical quantities such as voltage, current, and resistance is fundamental in electrical engineering, especially when troubleshooting circuits or conducting precise analysis. The multimeter is a key instrument for these measurements, combining the functions of a voltmeter, ammeter, and ohmmeter. When using a multimeter, it is essential to understand both its advantages and limitations, as its internal resistance can influence the accuracy of results. Multimeters are essential in electrical engineering, providing valuable data when troubleshooting or analyzing circuits. Ohm's Law ($V = IR$) was applied to calculate values for comparison with the readings obtained from the multimeter.

The multimeter's internal resistance, typically 10 MΩ, affects the circuit being measured, which can introduce errors in the results. A voltmeter, when connected in parallel, measures the potential difference across components, minimizing interference with the circuit. In contrast, an ammeter is connected in series to accurately measure the current flowing through the circuit.

Various types of errors, such as absolute error, relative error, and methodical error, were considered during the experiment. These errors influence the accuracy of measurements and understanding them is important for improving the reliability of results. The experiment also focused on error propagation, which shows how individual measurement uncertainties contribute to the overall uncertainty of the results.

There are several types of error:

- **Absolute Error** ($\Delta E$) represents the difference between the measured value and the actual value, indicating the size of the error. However, it does not indicate whether the measured value is higher or lower than the actual value.

- **Relative Error** (Erel or E%) expresses the size of the error relative to the true value, often in percentage form. This makes it easier to understand the significance of the error in relation to the actual measurement.

- **Methodical Error** arises from limitations in the instrument or the measurement method. Unlike other errors, it cannot be minimized by repeating measurements. Identifying the source of the error, which is often tied to the instrument itself, is the only way to address it.

- **Error Propagation** ($\Delta E_{max}$) calculates how uncertainties in individual measurements impact the overall result. In most experiments, multiple measurements are combined to calculate derived quantities, causing the errors to combine and contribute to the final uncertainty.

The primary goal was to measure voltage across different circuit components, observe how readings change with different voltage ranges, and identify different types of errors in the process.

# 2 Execution

## 2.1 Experimental setup

Workbench No.5

Used tools and Instruments:

- Breadboard, Tools box from workbench
- Multimeter Tenma and ELABO
- Power supply ELABO workbench

### 2.1.1 Experimental Part 1 – Setup

- **The objective** - In this section, the ELABO multimeter is used as a voltmeter to measure a single voltage value. The experiment focuses on determining how the measured value changes when different ranges on the multimeter are used. The primary goal is to demonstrate the effect of the multimeter's range settings on the accuracy of the measurement.
- **Test Circuit**

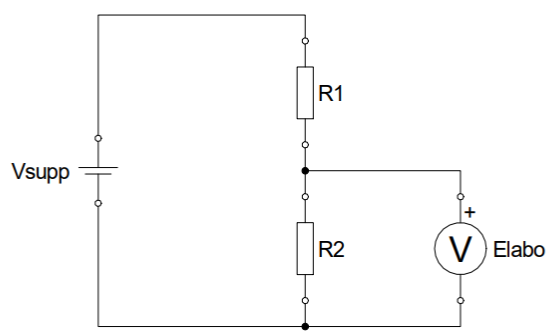


$$\text{Settings}: V_{SUPP} = 0.9\,\text{V} \quad R_1 = 820\text{R}\,\Omega \quad R_2 = 180\text{R}\,\Omega$$

### 2.3.3 Experimental Part 1A – Execution and Results

**Description of the measurement**

- A simple circuit was constructed using two resistors, $R_1$ and $R_2$ in series. The voltage across these resistors was measured using the ELABO multimeter at different voltage ranges. The recorded values for each range are listed below:

| Voltage Range | Measurement V(V) | Absolute Error(V) | Relative Error % |
|---|---|---|---|
| 2000 | 0.2 | 0.60002 | 370.382716 |
| 200 | 0.16 | 0.060016 | 37.04691358 |
| 20 | 0.165 | 0.0060165 | 3.713888889 |
| 2 | 0.1657 | 0.00061657 | 0.380598765 |
| 0.2 | 0.1666 | 0.00007666 | 0.047320988 |

**Table 1. Measuring the voltage across the resistors**

# 3 Evaluation

## 3.1 Evaluation Experiment Part 1A

**Question 1 -** Calculate all absolute and relative errors of the values measured with the multimeter from Part 1A.

For the calculation of the errors the following formulas were used:

**Absolute error = 0.03% f. Value + 0.01% f. Range**

*Ex: Abs Error = 0.0003 * 0.1666 + 0.0001 * 0.2 = 0.00007666*

**Relative error = absolute Error/Measurement x 100%**

$$Ex:\ Rel\ Error = \frac{0.00007666}{0.1666} * 100 = 0.04732\%$$

You can see both type of the errors in Table1.

**Question 2 -** What is your conclusion regarding the usage of the voltmeter ranges? What is the influence of the range to the accuracy?

As the voltage range decreases, the accuracy of the measurement increases, leading to a reduction in relative error. This is because a lower range allows the multimeter to capture more detailed readings, enhancing precision. The main conclusion is that for small voltage measurements, selecting a lower voltage range on the multimeter provides more reliable and precise values.

**Question 3 -** Draw a diagram of the relative error E% = f(U) for the 20 V range.

| Voltage V(V) | Relative Error % |
|---|---|
| 0.001 | 200.03 |
| 0.002 | 100.03 |
| 0.005 | 40.03 |
| 0.01 | 20.03 |
| 0.02 | 10.03 |
| 0.05 | 4.03 |
| 0.1 | 2.03 |
| 0.2 | 1.03 |
| 0.5 | 0.43 |
| 1 | 0.23 |
| 2 | 0.13 |
| 5 | 0.07 |
| 10 | 0.05 |
| 20 | 0.04 |

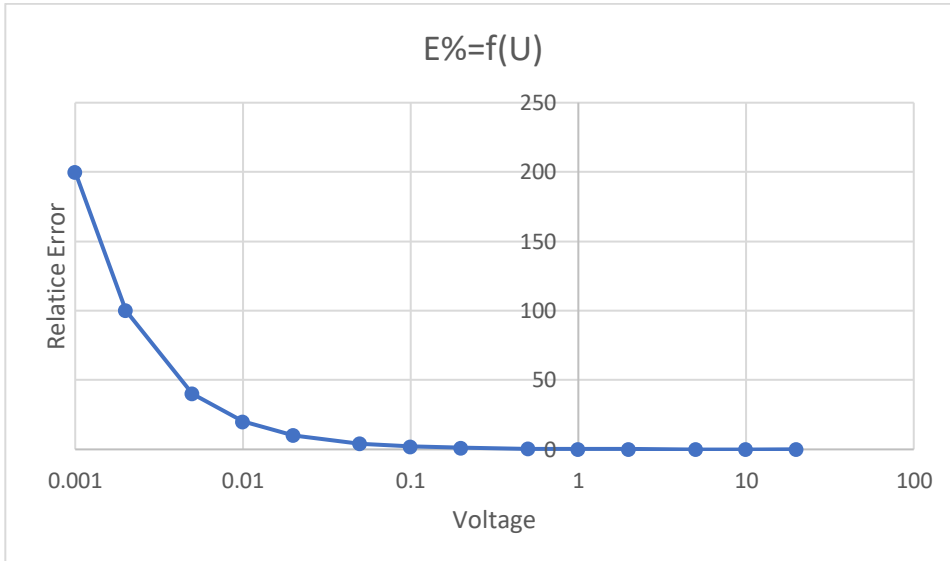


**Plot 2. Relative error for 20 V Range**

To calculate Relative error in V the following formula was used:

$$Relative\ Error\ \% = \frac{0.0003\ *V\ + 0.0001 * 20}{V} * 100\%$$

# 4 Experiment Part 1B: Voltage Measurement Pitfall

### 4.1 Experiment Part 1B Setup:

Used tools and instruments:

- Breadboard, Tools box from workbench
- Resistor Decade
- Multimeter ELABO
- Power Supply ELABO

### 4.2 Experiment Part 1B – Setup

- **The objective -** to observe common errors and pitfalls in voltage measurement. While methodical errors were previously considered negligible, leaving only instrument error, this is not true for every circuit. The goal is to explore which types of circuits require consideration of methodical errors alongside instrument errors.
- **Test Circuit:**

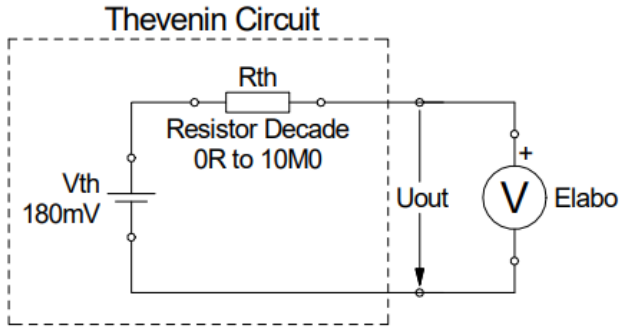


The task is to measure the output voltage $V_{out}$, which should be equal to the Thévenin voltage $V_{TH}$ . Ideally, this value should remain independent of both the resistors in the circuit and the voltmeter connected to it.

### 4.3 Experiment Part 1B – Execution and Results

**Description of the measurement:**

- The power supply had been turned on and adjusted to $V_{TH}$. The resistor decade was set to 0 Ω. The voltmeter was set to the optimal range for the best resolution, and the chosen range was noted. Afterward, voltage measurements were taken and recorded at the voltmeter for resistor values of 0 Ω, 10 Ω, 100 Ω, 1 kΩ, 10 kΩ, 100 kΩ, 1 MΩ, and 10 MΩ.

| Range | Resistance | Voltage(V) | Absolute Error | Relative Error (%) |
|---|---|---|---|---|
| 2 | 0 R | 0.18147 | 0.000254 | 0.140211 |
| 2 | 10 R | 0.18148 | 0.000254 | 0.140205 |
| 2 | 100 R | 0.18148 | 0.000254 | 0.140205 |
| 2 | 1 K | 0.18144 | 0.000254 | 0.140229 |
| 2 | 10 K | 0.18127 | 0.000254 | 0.140333 |
| 2 | 100 K | 0.17965 | 0.000254 | 0.141328 |
| 2 | 1 M | 0.16513 | 0.00025 | 0.151117 |
| 2 | 10 M | 0.09105 | 0.000227 | 0.24966 |

**Table 2. Measuring voltages for different resistances.**

# 5 Evaluation

### 5.1 Evaluation Experiment Part 1B

**Question 1 -** Calculate the relative error of the measured $V_{TH}$ value for all $R_{TH}$ settings.

For the calculation of the errors the following formulas were used:
**Absolute error = 0.03% f. Value + 0.01% f. Range**

*Ex: Abs Error = 0.0003 * 0.09105 + 0.0001 * 2 = 0.000227*

**Relative error = absolute Error/Measurement x 100%**

$$Ex: Rel\ Error = \frac{0.000227}{0.0915} * 100\% = 0.24966\%$$

**Question 2 -** It should be clearly visible that the accuracy of the displayed values is very good. But some of them are far away from the real values (the $R_{TH}$ = 0 Ω case). Here we can see a methodical error. What is the course of this error? Calculate the relative methodical error for all cases.

The output value is influenced by the internal resistance of the voltmeter, as this internal resistance interacts with the circuit, affecting the voltage distribution across components. When the voltmeter's internal resistance is relatively low, it draws additional current from the circuit, leading to a voltage drop that causes a deviation from the actual value. This results in displayed values that, while accurate in terms of display precision, differ from the true voltage due to the measurement setup.

$$M\% = \frac{V_{meas} - V_{true}}{V_{true}} * 100\%$$

Formula to calculate the methodical error in %.

There are the methodical errors for all measurements.

| Methodical Error (%) |
|---|
| 0 |
| 0.005510553 |
| 0.005510553 |
| 0.016531658 |
| 0.110211054 |
| 1.002920593 |
| 9.004243126 |
| 49.82641759 |

**Table 3. Measured methodical errors.**

# 6 Experiment Part 2: Current Measurement and Pitfalls

**6.1 Experiment Part2 – Setup:**
Workbench No 5

Used tools and instruments:

- Breadboard, Tools box from workbench
- Multimeter Tenma
- Power Supply ELABO

**6.2 Experiment Part 2 – Setup**

- **The objective** – measuring the current through the circuit. Exploring methodical and instrumental errors.
- **Test Circuit**:

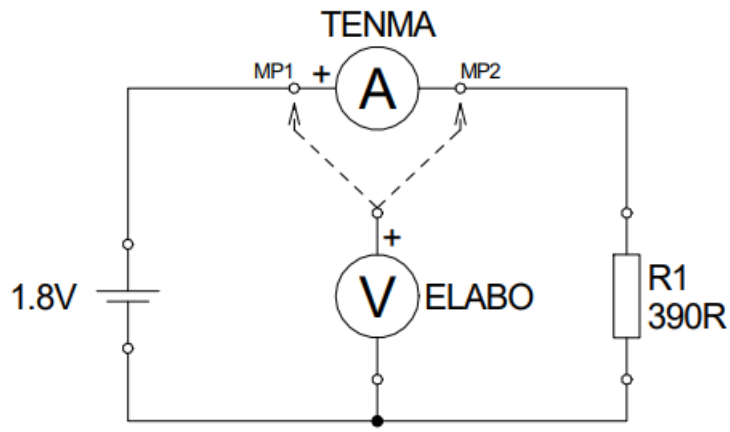


### 6.3 Experimental Part 2 – Execution and Results

**Description of the measurement:**

The circuit was connected to the power supply, and the best range for the voltmeter was selected. The range of the voltmeter was recorded, while the ammeter was already set to the highest range. The voltages at MP1 and MP2, as well as the current from the ammeter, were noted. The input terminal of the ammeter was then changed from 'A' to 'mAμA', and the turning knob of the ammeter was switched to 'mA' to adjust to a medium range. After this adjustment, the voltages and the current were recorded again. Following that, the turning knob of the ammeter was switched to 'μA', which provided the best range, offering the highest resolution. The final measurements of voltage and current were then recorded. You can see the result in the table below:

| Plug | Switch | V(MP)1 | V(MP)2 | Current (A) |
|---|---|---|---|---|
| A | A | 1.8093 | 1.8091 | 0.001 |
| mAuA | mA | 1.8093 | 1.7811 | 0.00458 |
| mAuA | uA | 1.8094 | 0.7895 | 0.00203 |

**Table 4. Measured current through TENMA.**

# 7 Evaluation

### 7.1 Evaluation Experiment Part 2

**Question 1-2** – Calculate relative and methodical error of the measured current for all settings.

To calculate the relative error the following formulas were used:

$$A = \frac{0.0005 * Measured\ Current + 0.0003}{Measured\ Current} * 100\%$$

$$mA = \frac{0.0015 * Measured\ Current + 0.000015}{Measured\ Current} * 100\%$$

$$uA = \frac{0.001 * Measured\ Current + 0.0000015}{Measured\ Current} * 100\%$$

And for methodical errors:

$$E\% = \frac{I_{meas} - I_{true}}{I_{true}} * 100\%$$ In our case: $$I_{true} = \frac{V_{MP1}}{390\Omega}$$

| Plug | Switch | V(MP)1 | V(MP)2 | Current A | Absolute Error(A) | Relative Error % | Methodical Error % |
|---|---|---|---|---|---|---|---|
| A | A | 1.8093 | 1.8091 | 0.001 | 0.0030005 | 300.05 | -78.33333333 |
| mAuA | mA | 1.8093 | 1.7811 | 4.58E-03 | 2.19E-05 | 0.477653997 | -8.10E-01 |
| mAuA | uA | 1.8094 | 0.7895 | 2.03E-03 | 3.5313E-06 | 0.173844336 | -5.60E+01 |

**Table 5. Calculated Relative and Methodical errors**

**Question 3 -** How to interpret the results of the systematical and methodical error calculation?

- Which range has the best accuracy?
  *As we can say from the table 5 uA has the best accuracy.*
- In which range should we get the smallest methodical error?
  *The smallest methodical error was observed in the mA range during the measurements.*
- The 'A'mper range should have the smallest methodical error. Why isn't it true in our calculation?
  *The amperage range should ideally show the smallest methodical error, as this range is typically designed to handle direct current measurements with high accuracy. However, in this calculation, the error was higher because a 300% error value was used in the computation. This exaggerated error value impacted the results, making it appear as though the amperage range had a larger methodical error than expected.*

**Question 4 -** When considering instrument and methodical instrument errors, which range is best/most acceptable in our case? What is your conclusion on the use of an ammeter?

The mA range proved to be the most acceptable in our case. The conclusion is that the mA range offers a better balance between accuracy and minimal disturbance to the circuit, making it more reliable for precise current measurements in this setup.

**Question 5 -** Calculate the resistance of the ammeter in all three ranges.

To calculate the resistance two different formula were used:

$$R_i = \frac{V_{MP1} - V_{MP2}}{I} \quad (1) \quad \text{and} \quad R_i = \frac{V_{MP1}}{I} - R_1 \quad (2)$$

According to these equations the following table was created:

| Switch | R1(Ω) | R2(Ω) |
|---|---|---|
| A | 0.2 | 1419.3 |
| mA | 6.16E+00 | 5.22E+00 |
| uA | 5.02E+02 | 5.01E+02 |

**Table 6. Calculated resistances for two different formulas**

**Question 6 -** Determine the error propagation in the µA range for both R formulas.

To calculate the propagation error in each case the following formulas were used:

$$1)\ \Delta R = \left|\frac{\partial R}{\partial (V_{MP1})} * \Delta V\right| + \left|\frac{\partial R}{\partial (V_{MP3})} * \Delta V\right| + \left|\frac{\partial R}{\partial i} * \Delta i\right| = \left|\frac{\Delta V}{i}\right| + \left|\frac{\Delta V}{i}\right| + \left|\frac{V_{MP1} - V_{MP2}}{i^2} * \Delta i\right|$$

$$2)\ \Delta R = \left|\frac{\partial R}{\partial (V_{MP1})} * \Delta V\right| + \left|\frac{\partial R}{\partial i} * \Delta i\right| + \left|\frac{\partial R}{\partial R_i} * \Delta R_1\right| = \left|\frac{\Delta V_{MP1}}{i}\right| + \left|\frac{\Delta V_{MP1}}{i^2} * \Delta i\right| + |\Delta R_i|$$

According to these equations the following table was created:

| | |
|---|---|
| $i$ | 2.03E-03 |
| $\Delta V(MP1)$ | 0.000743 |
| $V(MP1)$ | 1.8094 |
| $V(MP2)$ | 0.7895 |
| $\Delta i$ | 2.18E-06 |
| $\Delta V(MP2)$ | 0.000437 |
| Prop R (1) | 1.119915 |

| | |
|---|---|
| $i$ | 2.03E-03 |
| $\Delta V(MP1)$ | 0.00074282 |
| $\Delta i$ | 2.18E-06 |
| $\Delta R$ | 1.25 |
| Prop R (2) | 1.62E+00 |

**Table 7. Calculated Propagation errors for each measurements**

It can be concluded that the first formula is more effective for this measurement, as it produces a lower propagation error compared to the second formula. The lower propagation error in the first formula indicates greater reliability in the results, reducing the impact of uncertainties in the measurements. Therefore, it provides a more accurate representation of the values being measured.

In contrast, the higher propagation error in the second formula suggests that uncertainties are amplified, making it less suitable for precise measurements in this context.

# 8 Conclusion

The experiment demonstrated the significant influence of multimeter settings, particularly range selection, on the accuracy of voltage and current measurements. It was observed that both instrumental and methodical errors impact the results, and careful attention must be given to these factors to achieve precise measurements. Smaller ranges were found to provide better accuracy for voltage measurements, especially when dealing with low voltages. However, as the circuit resistance increased, the relative error also grew due to the internal resistance of the multimeter.

The high sensitivity of the µA range revealed how small uncertainties in measurements can lead to significant errors, especially when working with larger resistances. Error propagation showed how minor inaccuracies in voltage and current readings can significantly affect the calculated resistance values.

It was concluded that proper selection of the measurement range is essential for obtaining accurate readings. However, even with the most accurate settings, methodical errors, such as those caused by the multimeter's internal resistance, can still lead to deviations in results. Therefore, both instrumental and methodical errors must be considered for reliable data.

In addition, it became clear that understanding the limitations of measurement tools is crucial. This experiment reinforced the importance of careful calibration and range selection to minimize errors and ensure accurate results in electrical measurements.

# 9 References


1. Uwe Pagel, Natural Science Laboratory - General Information for EE Labs, Chapter II, Page 12-19